Conferencing
Distance Learning
Language School
Tour Guide

- Very comfortable
- Hygienic
- Rugged
- Foldable
- Wide frequency range

K 20 Conference Headphones

The K 20s are lightweight and extremely comfortable to wear stereo headphones.

Cleanable plastic ear cups enable the use with or without foam ear pads. A single-sided cable makes these conference headphones perfect for their application.

With their replaceable foam ear pads the K 20s comply with all hygienic standards, which makes them the ideal choice for applications like language schools, conferencing, courtrooms and similar.

AKG by HARMAN

The headphones are foldable for easy storage.

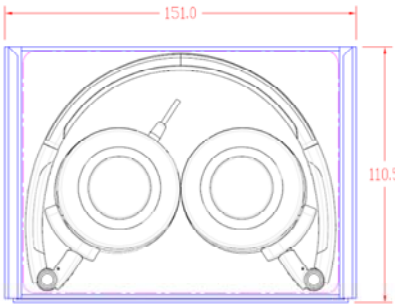

Ear pads can be replaced fast and easily and are available in packs of 100 units.

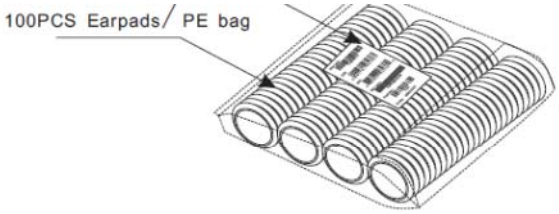

TECHNICAL SPECIFICATIONS

Type	dynamic, supra-aural, open-back
Sensitivity	102 dB SPL/1mW
Frequency Range	18-20,000 Hz
Impedance	32 ohms
Max. Input Power	100 mW
Finish	black
Cable	single-sided, 100 cm (39.4 in.)
Connector	3,5 mm stereo jack
Dimensions	160 x 135 x 60 mm (6.3 x 5.3 x 2.4 in.)
Net / Shipping Weight	119 / 169 g (4.2 / 6 oz.)
Masterpack Quantity	20
Masterpack Size	33 x 24 x 26,8 cm (13 x 9.4 x 10.6 in.)
Masterpack Net / Shipping Weight	3,2 / 3,6 kg (7 / 7.9 lbs.)
Item Number	3126H00200
100 Replacement Ear Pads	3126H00210

www.akg.com

AKG Acoustics GmbH
Lemböckgasse 21–25, 1230 Vienna /AUSTRIA, phone: + 43 1 86654 0
e-mail: sales@akg.com

AKG Acoustics, U.S.
8400 Balboa Boulevard, Northridge, CA 91329, U.S.A., phone: + 1 818 920 3212
e-mail: akgusa@harman.com

For other products and distributors worldwide visit www.akg.com
Specifications subject to change without notice.

by HARMAN